Accessories

BY-8-104

Stainless steel mounting kits, assembled with: BM8D, B8D.

Capacity	Part number
0.5t–2t	BY–8–104–0.5/2t
2.5t–5t	BY–8–104–2.5/5t
250lb–5KSE	BY–8–104–250lb/5KSE
5klb–10klb	BY–8–104–5/10k

Short description

Easy installation, self–centralization with steel ball, good self–aligning ability.

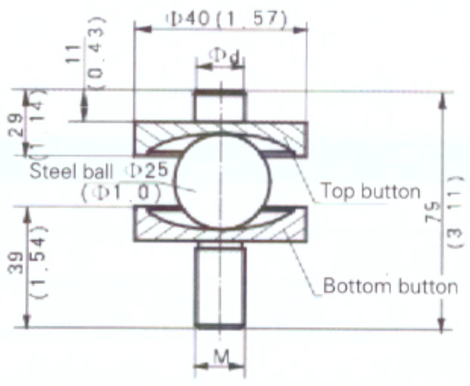

Capacity \ Dimension	d	M
0.5t–2t 250lb–5KSE	12 (0.47)	M12×1.75
		1/2–20UNF
2.5t–5t 5klb–10klb	20 (0.79)	M20×2.5
		3/4–16UNF

BJ-8-202

Stainless steel mounting kits, assembled with: BM8D, B8D.

Capacity	Part number
0.5t–2t	BJ–8–202–0.5/2t
2.5t–5t	BJ–8–202–2.5/5t
250lb–5KSE	BJ–8–202–250lb/5KSE
5klb–10klb	BJ–8–202–5/10K

Short description

Easy installation, height adjustable, anti–corrosion, self–centralization with steel ball, good anti–side loading ability.

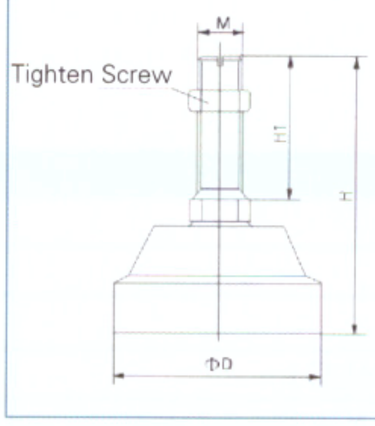

Capacity \ Dimension	ΦD	H	H1	M
0.5t–2t	60 (2.36)	92 (3.62)	50 (1.97)	M12×1.75
250lb–5KSE				1/2–20UNF
2.5t–5t	80 (3.15)	105 (4.13)	50 (1.97)	M20×2.5
5K–10klb				3/4–16UNF

BJ-8-205

Stainless steel mounting kits, assembled with: BM8D, B8D.

Capacity	Part number
0.5t–2t	BJ–8–205–0.5/2t
250lb–5KSE	BJ–8–205–250lb/5KSE

Short description

Easy installation, height adjustable, anti–corrosion, self–centralization with steel ball, good anti–side loading ability.

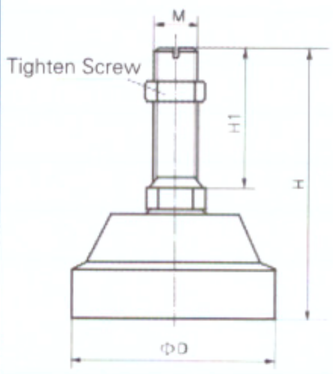

Capacity \ Dimension	D	H	H1	M
0.5t–2t	80 (3.15)	105 (4.13)	50 (1.97)	M12×1.75
250lb–5KSE				1/2–20UNF

BJ-8-215

Stainless steel mounting kits, assembled with: BM8D, B8D.

Capacity	Part number
0.5t–2t	BJ–8–215–0.5/2t

Short description Easy installation, height adjustable, self–centralization, good anti–side loading ability.

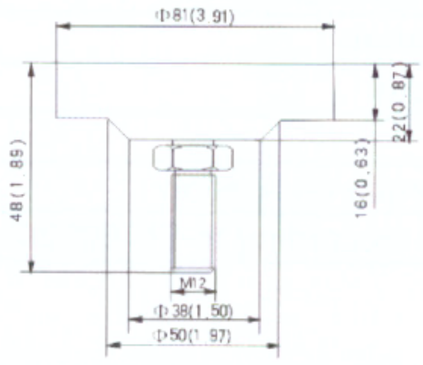

BJ-8-219

Stainless steel mounting kits, assembled with: BM8D, B8D.

Capacity	Part number
0.5t–2t	BJ–8–219–0.5/2t
250lb–5KSE	BJ–8–219–250lb/5KSE

Short description Easy installation, self–centralization, good anti–side loading ability.

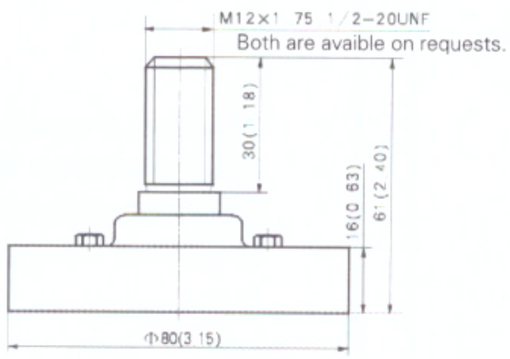

BJ-8-220

Stainless steel mounting kits, assembled with: BM8D, B8D.

Capacity	Part number
0.5t–2t	BJ–8–220–0.5/2t
250lb–5KSE	BJ–8–220–250lb/5KSE
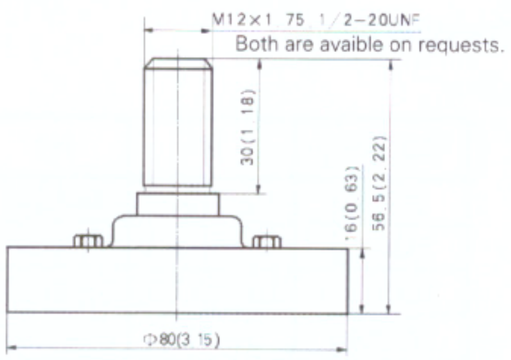
Short description Easy installation, self–centralization, good anti–side loading ability.