Accessories

BJ-8-206

Stainless steel foot, assembled with: BM8H, H8H.

Capacity	Part number
0.25–2t	BJ–8–206–0.25/2t
500lb–4klb	BJ–8–206–500lb/4K

Short description

Easy installation, self–centralization, anti–side loading and height adjustable.

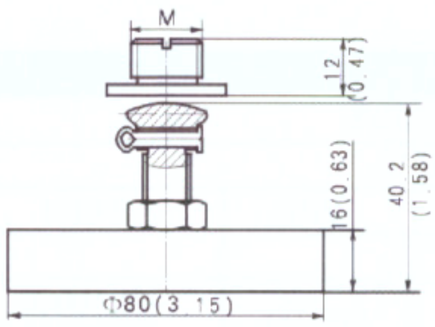

Capacity	M
0.25t–2t	M12 × 1.75
500lb–4klb	1/2–20UNF

BJ-8-207

Stainless steel foot, assembled with: BM8H, H8H.

Capacity	Part number
0.25t–2t	BJ–8–207–0.25/2t
5t	BJ–8–207–5t
500lb–4klb	BJ–8–207–500lb/4K
10klb	BJ–8–207–10K

Short description

Easy installation, self–centralization, anti–side loading and height adjustable.

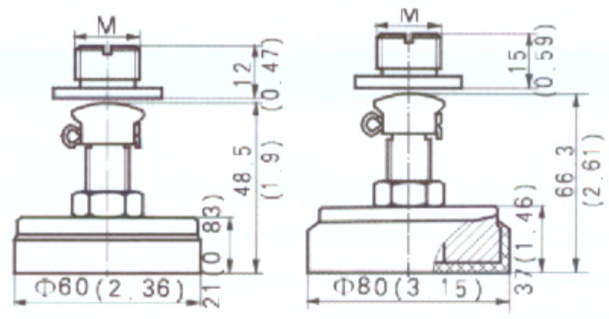

Capacity	M
0.25t–2t	M12 × 1.75
5t	M20 × 2.5
500lb–4klb	1/2–20UNF
10klb	3/4–16UNF

HJ-8-217

Alloy steel foot with rubber, assembled with: BM8H, H8H.

Capacity	Part number
0.25–2t	HJ–8–217–0.25/2t
500lb–4klb	HJ–8–217–500lb/4K

Short description

Easy installation, self–centralization, anti–side loading and height adjustable.

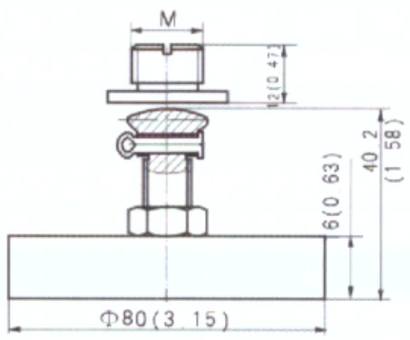

Capacity	M
0.25–2t	M12 × 1.75
500lb–4klb	1/2–20UNF

HJ-8-218

Alloy steel foot with rubber, assembled with: BM8H, H8H.

Capacity	Part number
0.25t–2t	HJ–8–218–0.25/2t
5t	HJ–8–218–5t
500lb–4klb	HJ–8–218–500lb/4K
10klb	HJ–8–218–10K

Short description

Easy installation, self–centralization, anti–side loading and height adjustable.

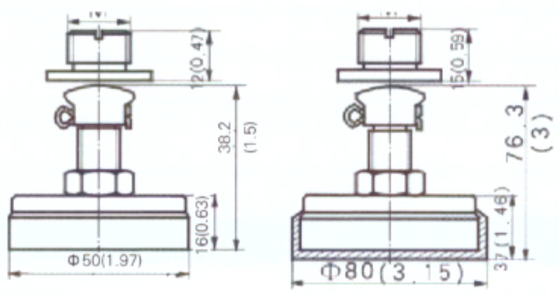

Capacity	M
250kg–2t	M12 × 1.75
5t	M20 × 2.5
500lb–4klb	1/2–20UNF
10klb	3/4–16UNF

BM-8-406

Stainless steel foot, assembled with: BM8H, H8H.

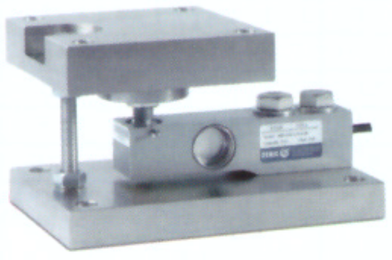

Capacity	Part number
0.25–2t	BM–8–406–0.25/2t
5t	BM–8–406–5t

Short description

- Compact construction, easy installation.
- Excellent anti–reversal ability.
- Anti–over loading ability.
- Good self–aligning ability.

Optional table		
Part number	Designation	Graphic
HM–8–401–1	Fixed	○
HM–8–401–2	Half–floating	⊖
HM–8–401–3	Floating	⊕

Specifications			
Capacity	t	0.25–2	5
Max. horizontal displacement	%FS	150	150
Max. anti–rotation	mm	±2.5	±3.5
Material	KN	3	10
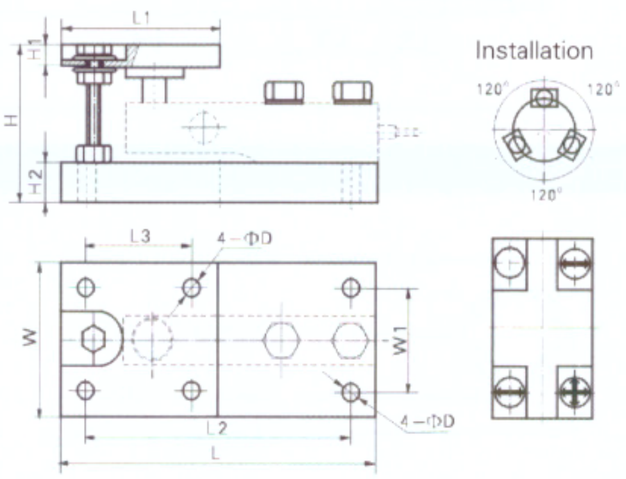
Capacity / Dimension	0.25–2t 0.5–5klb	5t 10klb
L	177.8(7.0)	235(9.25)
L1	114.3(4.5)	152.4(6.0)
L2	152.4(6.0)	184.2(7.25)
L3	88.9(3.5)	101.6(4.0)
H	104.8(4.13)	136.5(5.37)
H1	25.4(1.0)	32(1.26)
H2	19(0.75)	25.4(1.0)
W	114.3(4.5)	152.4(6.0)
W1	88.9(3.5)	101.6(4.0)
D	11(0.43)	17.5(0.69)